MVPplus Quick Reference Guide

Use this guide to operate your printer on a daily basis. For more detailed information, refer to the *User Guide*.

Contents

14069L-001 Rev. A
12/6/06

External View

Figure 1 shows the outside of the printer.

Figure 1 • Exterior of Printer

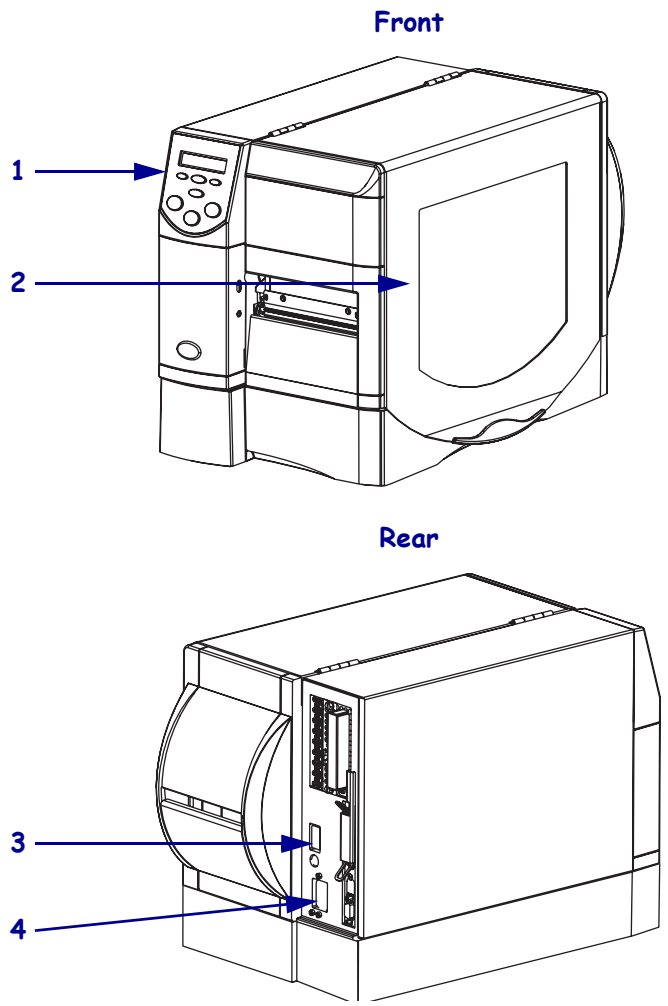

1	Control panel
2	Media door
3	Power switch (**O** = Off, **I** = On)
4	AC power connector

Printer Media Compartment

Figure 2 shows the components inside the media compartment of your printer. Depending on installed options, your printer may look slightly different.

Figure 2 • Printer Components

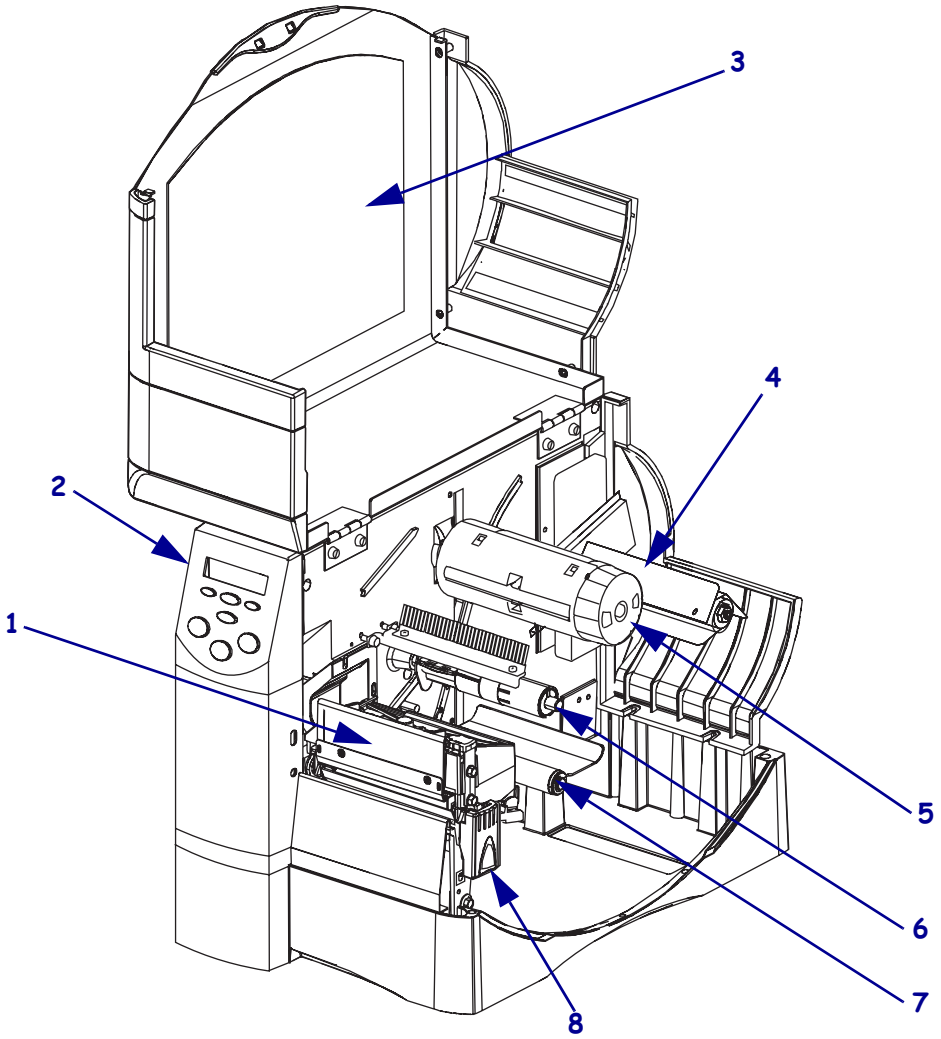

1	Printhead assembly	5	Ribbon take-up spindle
2	Control panel	6	Ribbon supply spindle
3	Media door	7	Dancer assembly
4	Media supply spindle	8	Printhead release latch

Types of Media

The printer can use various types of media (Table 1).

Table 1 • Types of Media

Media Type	How It Looks	Description
Non-Continuous Roll Media	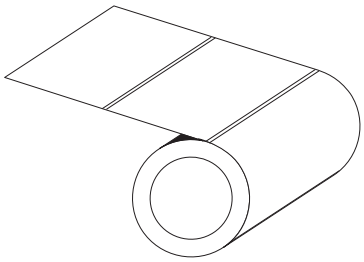	Roll media is wound on a 3-in. (76-mm) core. Labels have adhesive backing that sticks them to a liner, and they are separated by gaps, holes, notches, or black marks. Tags are separated by perforations.
Non-Continuous Fanfold Media	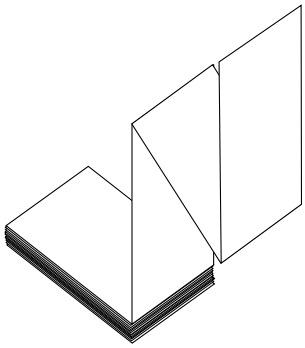	Fanfold media is folded in a zigzag pattern. Fanfold media can have the same label divisions as non-continuous roll media. The divisions would fall on or near the folds.
Continuous Roll Media	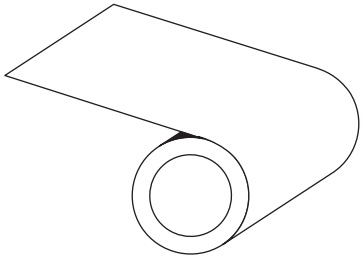	Continuous media is wound on a core and is without gaps, holes, notches, or black marks. This allows the image to be printed anywhere on the label. With continuous media, use the transmissive sensor so the printer can detect when the media runs out.

Load Media

Use the instructions in this section to load roll media in Tear-Off mode (Figure 3). For instructions for loading fanfold media or for loading in different print modes, refer to the *User Guide*.

Figure 3 • Tear-Off Mode Media Path

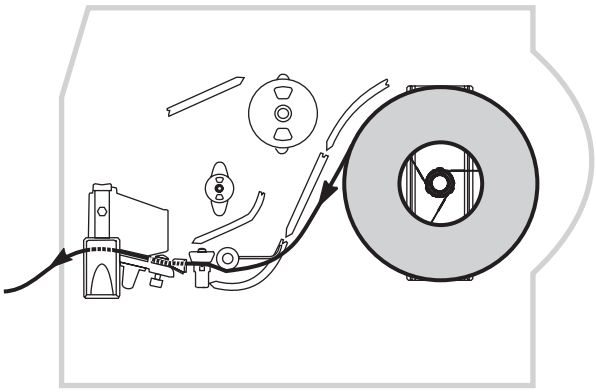

Caution • When you are loading media or ribbon, remove all jewelry that could come into contact with the printhead or other printer parts.

To Load Roll Media in Tear-Off Mode, complete these steps:

1. Remove and discard any tags or labels that are dirty or that are held by adhesives or tape.

Tag Stock	Labels
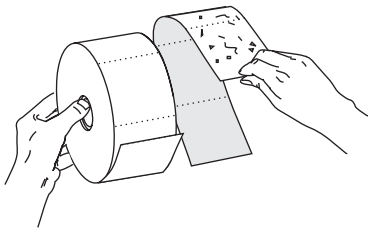	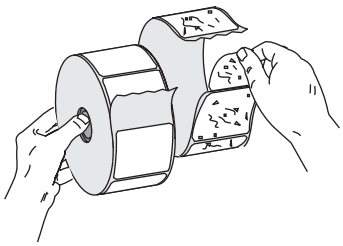

2. Place the roll of media on the media supply spindle. Push the roll as far back as it will go.

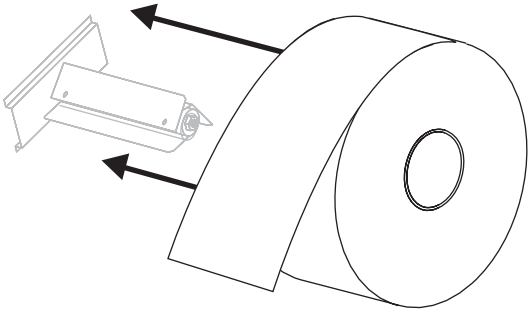

3. Press the printhead release latch to open the printhead assembly. Lift the printhead until it latches open.

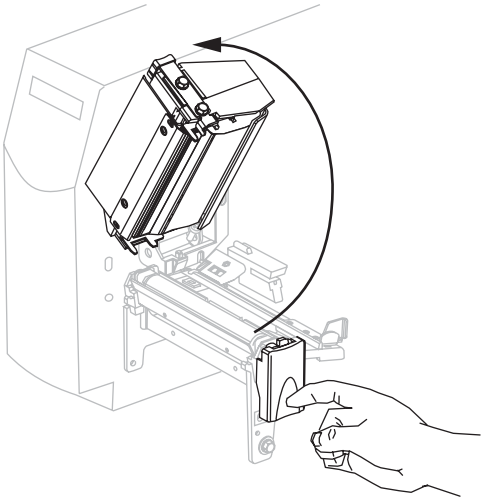

4. Slide out the media guide.

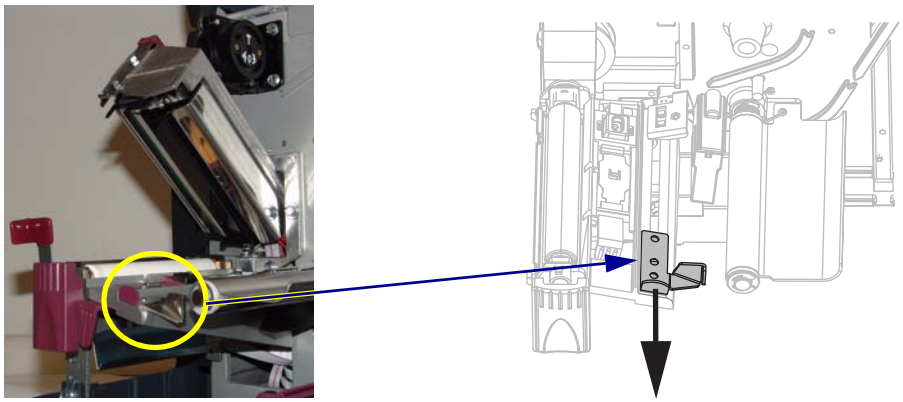

5. Feed the media under the dancer assembly (**1**), through the slot in the transmissive sensor (**2**—standard transmissive sensor shown), and under the ribbon sensor (**3**).

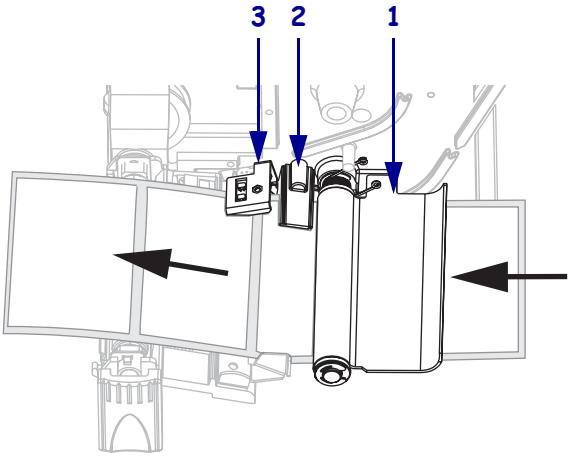

6. Push the media to the back of the transmissive sensor (**1**). Slide in the media guide (**2**) until it touches the edge of the media.

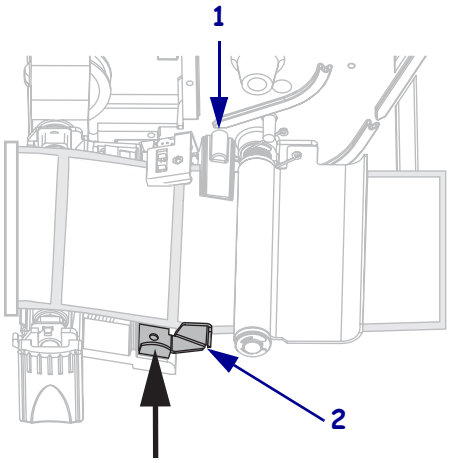

7. Close the printhead assembly.

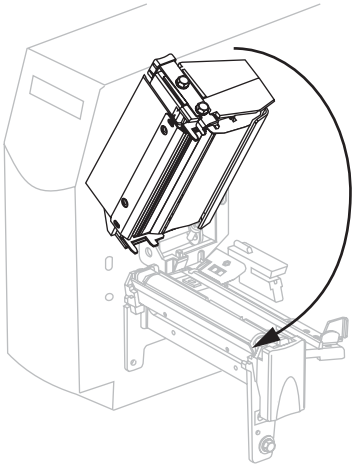

8. If the printer is paused (the Pause light is blinking), press PAUSE to enable printing.

Position the Media Sensors

This printer uses two types of media sensors: transmissive and reflective.

Select or Position the Transmissive Sensor

By default, the printer uses the transmissive sensor (Figure 4), which you can adjust for optimal print performance. The reflective sensor is a secondary media sensing system that is activated only if the transmissive sensor cannot be used to calibrate the media.

Figure 4 • Adjustable Transmissive Sensor

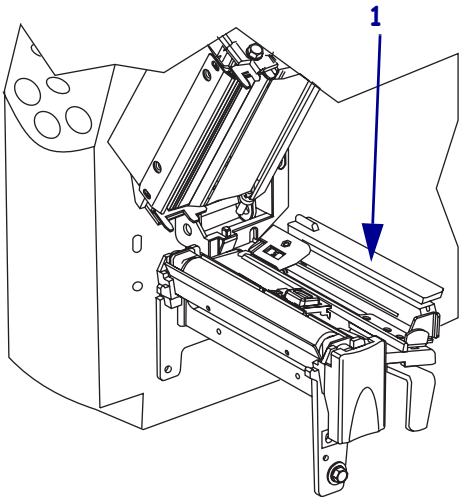

The transmissive sensor is equipped with a slide-on sensor sleeve (Figure 5). This sleeve has a notch on one end and a hole in the middle, which help the printer calibrate media that has an edge notch or an intra-label gap.

Figure 5 • Adjustable Transmissive Sensor and Sensor Sleeve

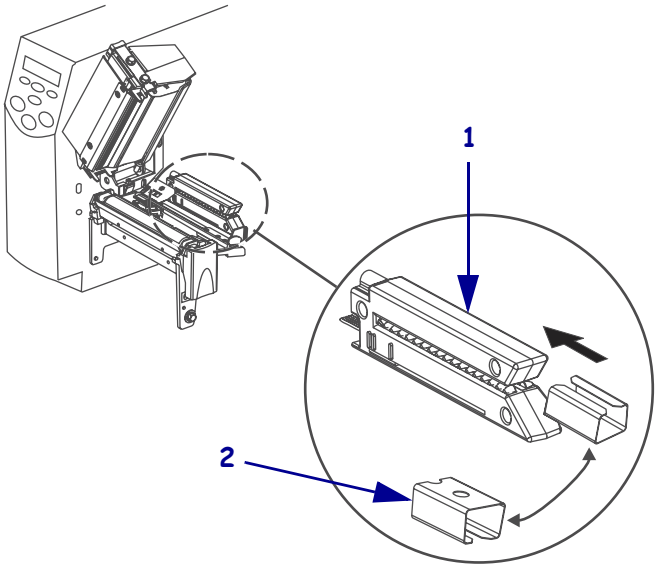

The positioning marks correspond to the notch and hole in the sensor sleeve.

Figure 6 • Transmissive Sensor with Adjustment Tab Pointer

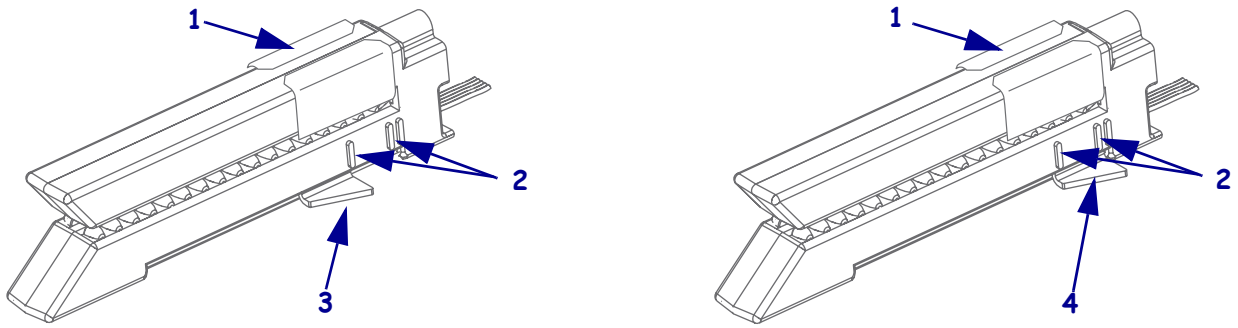

1	Sensor sleeve
2	Positioning marks
3	Adjustment tab pointer (outer position)
4	Adjustment tab pointer (inner position)

To adjust the transmissive sensor, complete these steps:

1. Press the printhead open lever to release the printhead assembly.
2. See Figure 4. Locate the transmissive sensor.
3. Push the sensor sleeve all the way in on the transmissive sensor.
4. Locate the white adjustment tab pointer on the back of the transmissive sensor.
5. What type of media are you using?

If you are using…	Then…
Non-continuous media with notched edges	Move the adjustment tab pointer to the inner positioning mark. The point of the tab should align with the mark.
Non-continuous media without notched edges	Move the adjustment tab to the outer positioning mark. The point of the tab should align with the mark.
Continuous media	Move the adjustment tab to the outer positioning mark. The point of the tab should align with the mark.

Note • Certain types of media may require you to position the adjustment tab to locations outside of the sensor sleeve.

6. Ensure the media and ribbon are properly positioned.
7. Close the printhead assembly.

Adjust the Reflective Sensor

Note • This sensor is typically covered by a factory-installed plate. If you need to enable this sensor, you must remove the plate.

The reflective sensor is compatible with most types of media. With non-continuous media, the reflective sensor detects the start-of-label indicator (the notch, hole, black mark, or gap between die-cut labels). With both continuous media and non-continuous media, the sensor detects an out-of-paper condition.

Position the reflective sensor in the following way:

- directly under the notch, hole, or black mark with these types of labels
- anywhere along the width of the media if there is a gap between labels
- anywhere under the media for continuous media

The glow of the red light through the media may help you accurately position the sensor.

Figure 7 • Adjusting the Reflective Sensor

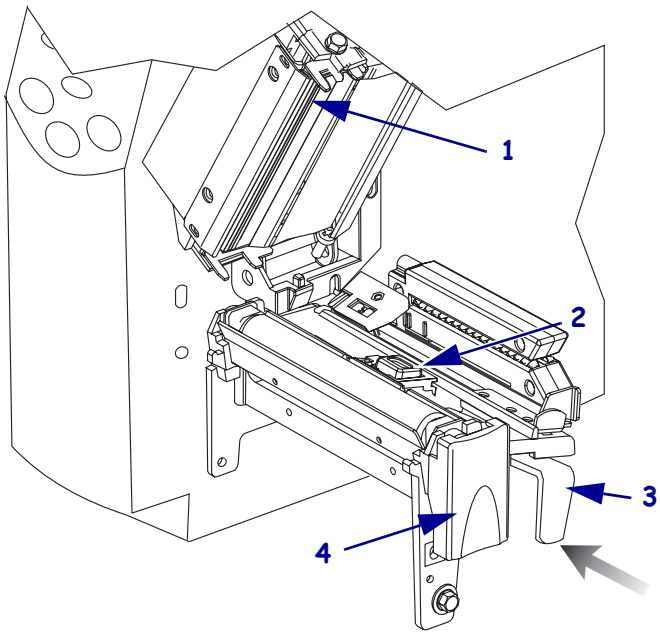

1	Printhead assembly
2	Reflective sensor
3	Reflective sensor positioning lever
4	Printhead release latch

To adjust the reflective sensor, complete these steps:

1. See Figure 7. Press the printhead release latch.
2. Lift the printhead until it latches open.
3. Locate the reflective sensor positioning lever.
4. Move the reflective sensor positioning lever across the width of the media until the reflective sensor aligns with the gap or notch.
5. Close the printhead assembly.

Ribbon Overview

Ribbon is a thin film that is coated on one side with wax, resin, or wax resin, which is transferred to the media during the thermal transfer process.

When to Use Ribbon

Thermal transfer media requires ribbon for printing while direct thermal media does not. To determine if ribbon must be used with a particular media, perform a media scratch test.

To perform a media scratch test, complete these steps:

1. Scratch the print surface of the media rapidly with your fingernail.
2. Did a black mark appear on the media?

If a black mark...	Then the media is...
Does not appear on the media	**Thermal transfer**. A ribbon is required.
Appears on the media	**Direct thermal**. No ribbon is required.

Coated Side of Ribbon

Ribbon can be wound with the coated side on the inside or outside (Figure 8). This printer can only use ribbon that is coated on the outside.

Figure 8 • Ribbon Coated on Outside or Inside

To determine which side of a ribbon is coated, complete these steps:

1. Peel a label from its liner.
2. Press a corner of the sticky side of the label to the outer surface of the roll of ribbon.
3. Peel the label off of the ribbon.

4. Observe the results. Did flakes or particles of ink from the ribbon adhere to the label?

If ink from the ribbon...	Then...
Adhered to the label	The ribbon is coated on the **outer** surface.
Did not adhere to the label	The ribbon is coated on the **inner** surface and cannot be used in this printer. To verify this, repeat the test on the other surface of the roll of ribbon.

Load Ribbon

Always use ribbon that is wider than the media to protect the printhead from wear. For direct thermal printing, do not load ribbon in the printer.

Figure 9 • Ribbon Path

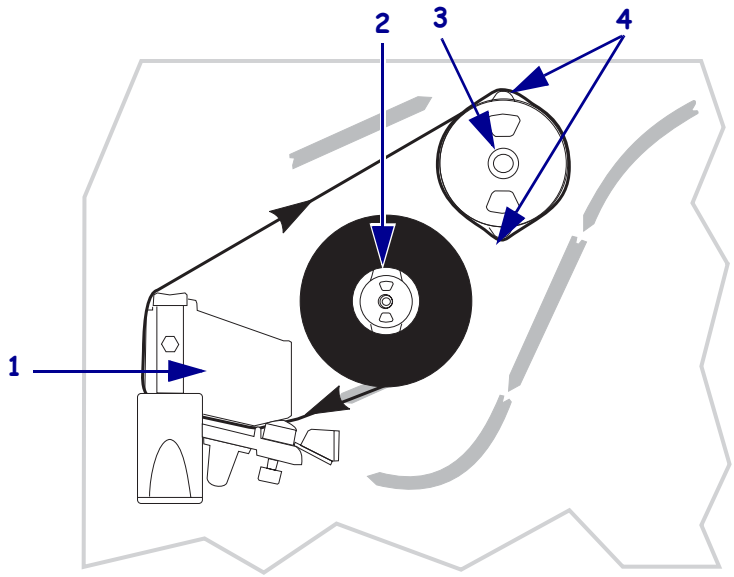

1	Printhead assembly
2	Ribbon supply spindle
3	Ribbon take-up spindle
4	Tension blades

Caution • When you are loading media or ribbon, remove all jewelry that could come into contact with the printhead or other printer parts.

To load ribbon, complete these steps:

1. Press the printhead release latch to open the printhead assembly. Lift the printhead until it latches open.

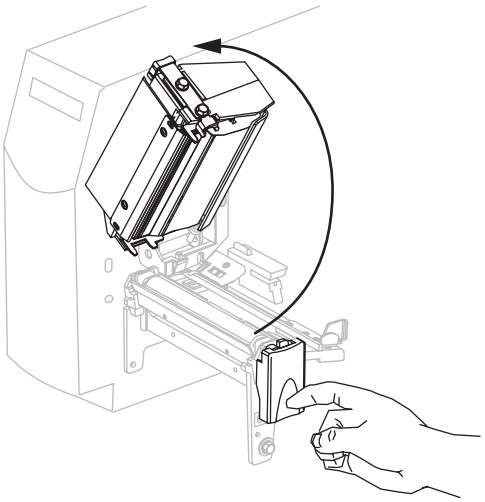

2. Orient the ribbon with the loose end unrolling clockwise.

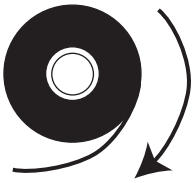

3. Place the roll of ribbon on the ribbon supply spindle (**1**) and push it all the way back.

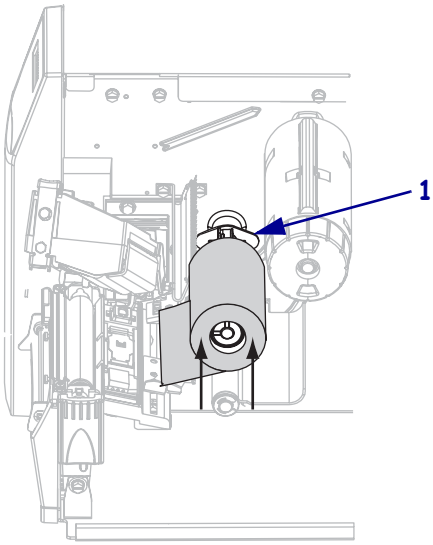

4. Pull the end of the ribbon under the printhead assembly (**1**) and out the front of the printer.

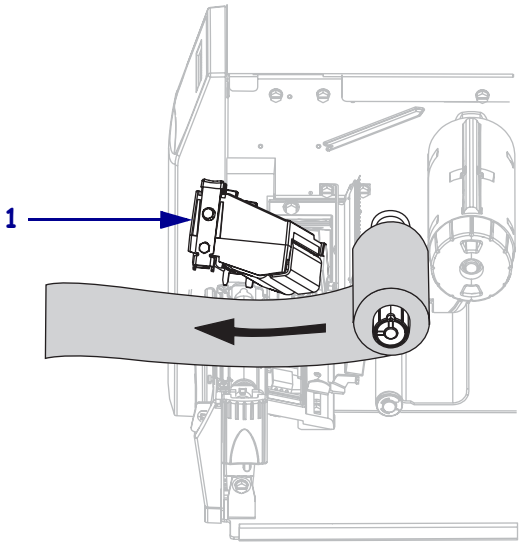

5. Close the printhead assembly.

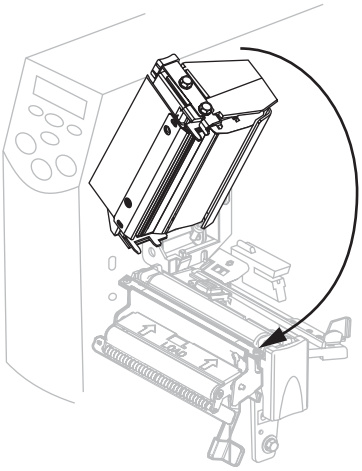

6. Wind the ribbon clockwise onto the ribbon take-up spindle (**1**).

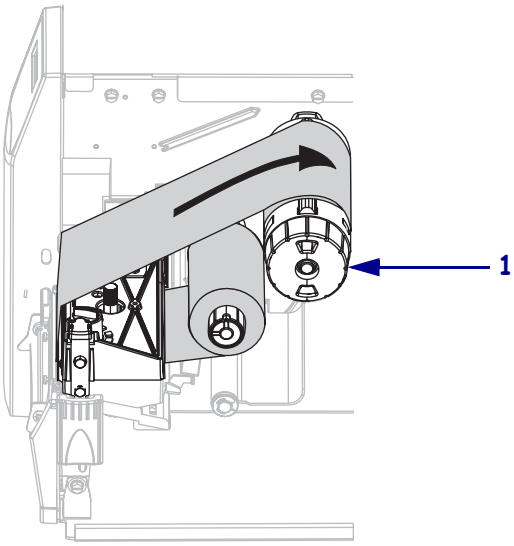

Remove Used Ribbon

To remove used ribbon, complete these steps:

1. **Caution •** Do not cut the ribbon directly on the ribbon take-up spindle. Doing so may damage the spindle.

   If the ribbon has not run out, cut or break it before the ribbon take-up spindle (**1**).

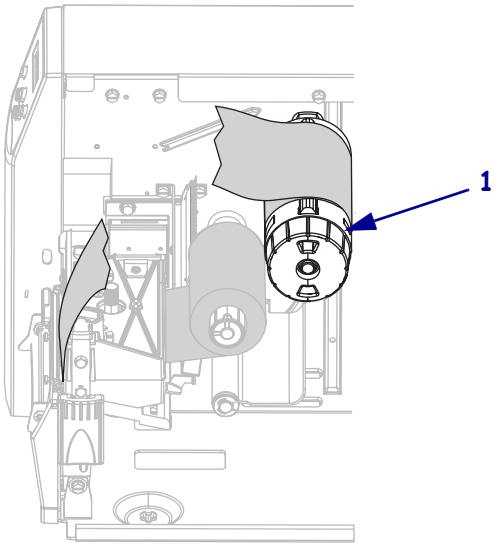

2. To loosen the ribbon, squeeze it against the ribbon take-up spindle tension blades (**1**). At the same time, turn the ribbon take-up spindle release knob counterclockwise (**2**).

   The tension blades collapse into the ribbon take-up spindle, loosening the ribbon.

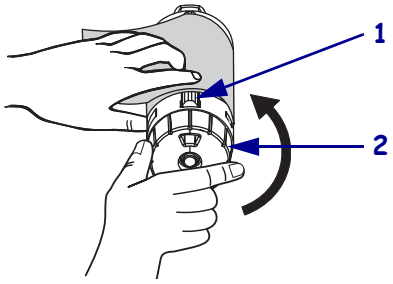

3. Slide the used ribbon off of the ribbon take-up spindle and discard.

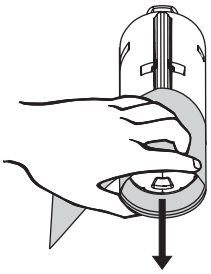

Adjust Printhead Pressure

You may need to adjust printhead pressure if printing is too light on one side or if you use thick media.

See Figure 10. The pressure adjustment dials have different settings that are designated by blocks of increasing size embossed on the print mechanism. The smallest block (fully counterclockwise) is considered position 1, and the largest block (fully clockwise) is considered position 4 (or 7 for the 300MVPplus).

Figure 10 • Printhead Pressure Adjustment Dials

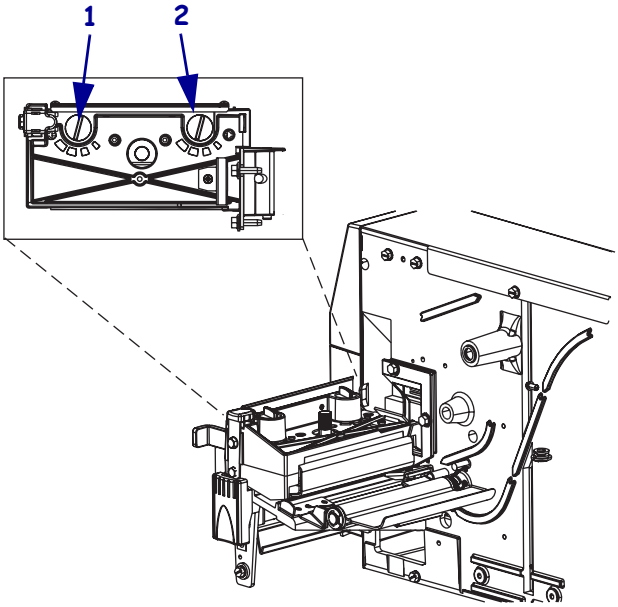

1	Outside dial
2	Inside dial

To set printhead pressure, complete these steps:

1. Use Table 2 or Table 3 to select the initial dial settings for your media, depending on which printer you have.

Table 2 • 200MVPplus Printhead Pressure

Media Width	Inside Dial	Outside Dial
1 in. (25.4 mm)	3	1
2 in. (51 mm)	4	1
3 in. (76 mm)	3	2
3.5 in. and up (89 mm and up)	3	3

Table 3 • 300MVPplus Printhead Pressure

Media Width	Inside Dial	Outside Dial
2 in. (50 mm)	6	1
3 in. (75 mm)	6	2
4 in. (100 mm)	7	3
5 in. (125 mm)	7	4
5.5 in. and up (140 mm and up)	6	6

2. If necessary, adjust the pressure adjustment dials as follows:

If the media...	Then...
Requires higher pressure to print well	Increase both dials one position.
Shifts left while printing	Increase the outside dial setting one position, or decrease the inside dial setting one position.
Shifts right while printing	Increase the inside dial setting one position, or decrease the outside dial setting one position.
Prints too lightly on the left side of the label.	Increase the inside dial setting one position.
Prints too lightly on the right side of the label.	Increase the outside dial setting one position.

Control Panel

The control panel (Figure 11) contains the lights that reflect basic operation and the buttons that you may need to press during basic operation.

Figure 11 • Control Panel

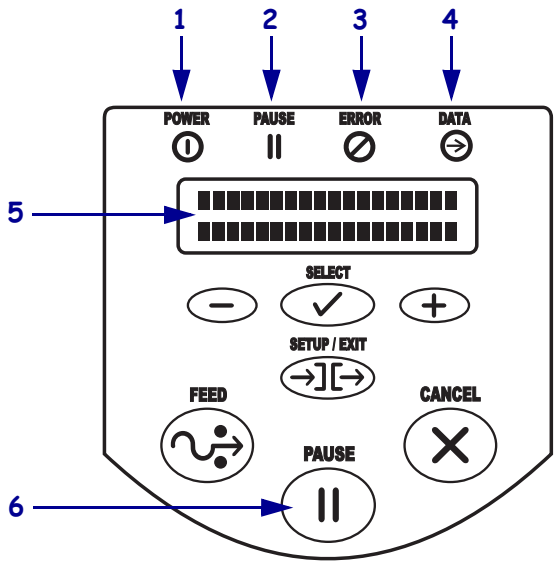

1	Power light	Indicates that the printer is on.
2	PAUSE light	Blinks when the printer is paused.
3	Error light	Blinks or remains on when the printer needs attention.
4	Data light	Blinks quickly when the printer is receiving data.
5	LCD	Shows the printer's operating status.
6	PAUSE button	Starts or stops printer operation when pressed.

Print a Configuration Label

A configuration label lists the printer settings that are stored in configuration memory. After you load the media and ribbon (if necessary), print a configuration label as a record of your printer's current settings. Keep the label to use when troubleshooting printing problems.

To print a configuration label, complete these steps:

1. On the control panel, press SETUP/EXIT.
2. Press PLUS (+) or MINUS (-) to scroll through the parameters until you reach **LIST SETUP**.
3. Press SELECT to select the parameter.
4. Press PLUS (+) to confirm printing.

   A configuration label prints (Figure 12).

Figure 12 • Configuration Label

```
PRINTER CONFIGURATION

Brady Corporation
Bradyprinter MVP-Series

+11................ DARKNESS
+000............... TEAR OFF
TEAR OFF........... PRINT MODE
CONTINUOUS......... MEDIA TYPE
WEB................ SENSOR TYPE
AUTO SELECT........ SENSOR SELECT
THERMAL-TRANS...... PRINT METHOD
168 00/12 MM....... PRINT  WIDTH
1219............... LABEL LENGTH
RS232.............. SERIAL COMM.
38400.............. BAUD
8 BITS............. DATA BITS
NONE............... PARITY
XON/XOFF........... HOST HANDSHAKE
NONE............... PROTOCOL
000................ NETWORK ID
NORMAL MODE........ COMMUNICATIONS
<~>  7EH........... CONTROL PREFIX
<^>  5EH........... FORMAT PREFIX
<,>  2CH........... DELIMITER CHAR
ZPL II............. ZPL MODE
CALIBRATION........ MEDIA POWER UP
CALIBRATION........ HEAD CLOSE
DEFAULT............ BACKFEED
+000............... LABEL TOP
+0000.............. LEFT POSITION
058................ WEB S.
068................ MEDIA S.
072................ RIBBON S.
001................ TAKE LABEL
213................ MEDIA LED
111................ RIBBON LED
+10................ LCD ADJUST
DPSWFXM............ MODES ENABLED
................... MODES DISABLED
1984 12/MM FULL.... RESOLUTION
V39.10.5P02 <-..... FIRMWARE
V1.9.0.0........... HARDWARE ID
CUSTOMIZED......... CONFIGURATION
3072............R:  RAM
NONE............B:  MEMORY CARD
2048............E:  ONBOARD FLASH
NONE............... FORMAT CONVERT
NONE............... OPTION
PERMANENT.......... IP RESOLUTION
ALL................ IP PROTOCOL
010.003.004.150.... IP ADDRESS
255.000.000.000.... SUBNET MASK
000.000.000.000.... DEFAULT GATEWAY
2000-12-18 12:18:18 TIME STAMP

FIRMWARE IN THIS PRINTER IS COPYRIGHTED
```

Configure the Printer

Use the LCD on the control panel to view and adjust printer settings.

Note • Your label preparation software or the printer driver may override adjustments made through the control panel. Refer to the software or driver documentation for more information.

How to View or Modify Parameters

To view or modify parameters, complete these steps:

1. Press SETUP/EXIT to enter Setup mode.
2. While viewing parameters, press PLUS (+) to continue to the next parameter, or press MINUS (-) to return to the previous parameter in the cycle.
3. Press SELECT when you wish to modify a parameter or view its options.
4. Press or to modify the parameter.

   When a parameter is changed, an asterisk (*) appears in the upper left corner of the display to indicate that the value is different from the one currently active in the printer.
5. Press SETUP/EXIT.

   The LCD displays SAVE CHANGES.
6. Press to display the save options (Table 4).

Table 4 • Save Options When Leaving Setup Mode

LCD	Description
PERMANENT	Stores values in the printer even when power is turned off.
TEMPORARY	Saves the changes until power is turned off.
CANCEL	Cancels all changes made since you entered Setup mode, except for changes made to the darkness and tear-off settings, which go into effect as soon as they are made.
LOAD DEFAULTS	Restores all parameters other than the network settings back to the factory defaults. Use care when loading defaults because you will need to reload all settings that you changed manually. **Note •** Loading factory defaults causes the printer to auto-calibrate.
LOAD LAST SAVE	Loads values from the last permanent save.
DEFAULT NET	Restores the wired and wireless network settings back to factory defaults.

7. Press SETUP/EXIT to select the displayed choice.

   When the configuration and calibration sequence is done, PRINTER READY displays.

Basic Printer Parameters

Table 5 shows some parameters that you may need to change to configure your printer initially. Refer to the *User Guide* for the complete list of printer parameters.

Table 5 • Printer Parameters

Menu Display	Description
DARKNESS	**Adjust Print Darkness** **Default:** +10 **Range:** 0 to 30
PRINT MODE	**Select Print Mode** **Default:** TEAR-OFF **Selections:** TEAR-OFF, PEEL-OFF, CUTTER, REWIND
MEDIA TYPE	**Set Media Type** See *Types of Media on page 4* for more information about media types. **Default:** NON-CONTINUOUS **Selections:** CONTINUOUS, NON-CONTINUOUS
SENSOR TYPE	**Set the Sensor Type** **Default:** WEB **Selections:** WEB (gaps or perforations between labels), MARK (black marks on the back of the liner to indicate where labels end)
SENSOR SELECT	**Select a Sensor** **Default:** TRANSMISSIVE **Selections:** AUTO SELECT (the printer uses what it thinks is the best sensor), REFLECTIVE (black mark media), TRANSMISSIVE (most other media types)
PRINT METHOD	**Select Print Method** **Default:** THERMAL TRANSFER **Selections:** THERMAL TRANSFER (uses ribbon), DIRECT THERMAL (does not use ribbon)

Cleaning Procedures

Important • Brady is not responsible for damage caused by the use of cleaning fluids on this printer.

Specific cleaning procedures are provided on the following pages. shows the recommended cleaning schedule. These intervals are intended as guidelines only. You may have to clean more often, depending upon your application and media.

Table 6 • Recommended Cleaning Schedule

Area		Method	Interval
Printhead		Solvent*	**Direct Thermal Mode:** After every roll of media (or 500 feet of fanfold media). **Thermal Transfer Mode:** After every roll of ribbon or three rolls of media.
Platen roller		Solvent*	
Media sensors		Air blow	
Ribbon sensor		Air blow	
Media path		Solvent*	
Ribbon path		Solvent*	
Pinch roller. (part of Peel-Off option)		Solvent*	
Cutter module	If cutting continuous, pressure-sensitive media	Solvent*	After every roll of media (or more often, depending upon your application and media).
	If cutting tag stock or label liner material	Solvent* and air blow	After every two or three rolls of media.
Tear-off/peel-off bar		Solvent*	Once a month.
Take-label sensor		Air blow	Once every six months.

* Brady recommends using Preventive Maintenance Kit (part number PCK-4). In place of this kit, you may use a clean swab dipped in a solution of isopropyl alcohol (minimum 90%) and deionized water (maximum 10%).

Clean the Exterior

You may clean the exterior surfaces of the printer with a lint-free cloth and a small amount of a mild detergent, if necessary. Do not use harsh or abrasive cleaning agents or solvents.

Clean the Printhead and Platen Roller

You can minimize printhead wear and maintain print quality with regular preventive measures. To avoid abrasion:

- Clean the printhead frequently, and use well-lubricated thermal transfer ribbons with backings optimized to reduce friction.
- Minimize printhead pressure and burn temperature settings by optimizing the balance between the two.
- Ensure that the thermal transfer ribbon is as wide or wider than the label media to prevent exposing the elements to the more abrasive label material.

For best results, clean the printhead after changing every roll of ribbon. Inconsistent print quality, such as voids in the bar code or graphics, may indicate a dirty printhead.

Note • For printers with a peel assembly, keep the peel assembly closed while cleaning the platen roller to reduce the risk of bending the tear-off/peel-off bar.

Figure 13 • Location of the Printhead and Platen Roller

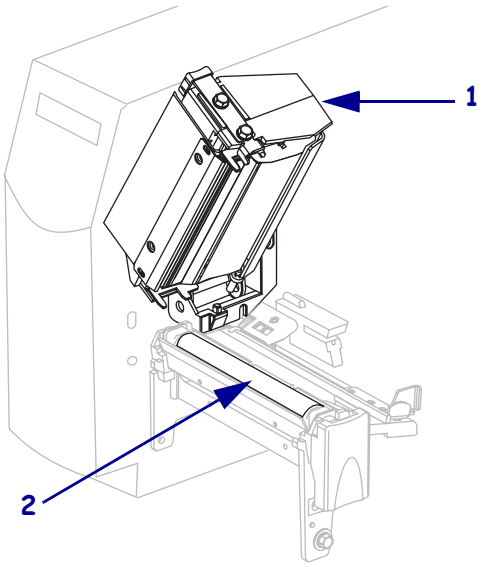

1	Printhead assembly
2	Platen roller

Caution • The printhead may be hot and could cause severe burns. Allow the printhead to cool.

Caution • Before touching the printhead assembly, discharge any built-up static electricity by touching the metal printer frame or by using an anti-static wriststrap and mat.

To clean the printhead and platen roller, complete these steps:

1. Open the printhead assembly.
2. Remove the media and ribbon.
3. Using the swab from the Preventive Maintenance Kit (part number PCK-4), wipe along the brown strip on the printhead assembly from end to end. In place of the Preventive Maintenance Kit, you may use a clean swab dipped in a solution of isopropyl alcohol (minimum 90%) and deionized water (maximum 10%). Allow the solvent to evaporate.

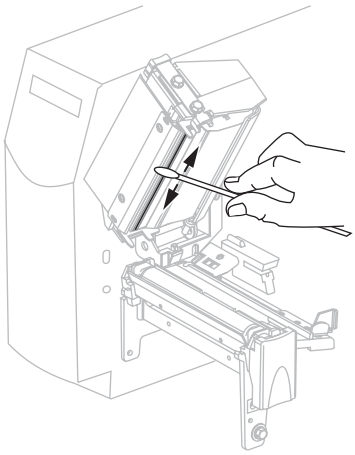

4. While manually rotating the platen roller, clean it thoroughly with the swab. Allow the solvent to evaporate.

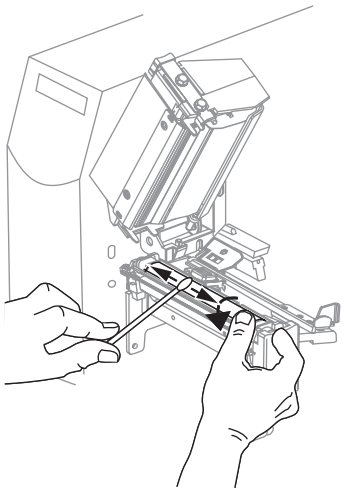

5. Reload media and ribbon, and close the printhead assembly.

Note • If performing this procedure does not improve print quality, try cleaning the printhead with *Save-A-Printhead* cleaning film. This specially coated material removes contamination buildup without damaging the printhead. Call your authorized Brady reseller for more information.

Fuse Replacement

A user-replaceable AC power fuse is located just below the AC power switch at the rear of the printer. The replacement fuse is a 5 × 20 mm fast-blow style rated at 5 Amp/250 VAC.

Caution • Turn off (**O**) the printer and disconnect it from the power source before performing the following maintenance.

Figure 14 • Replacing the Fuse

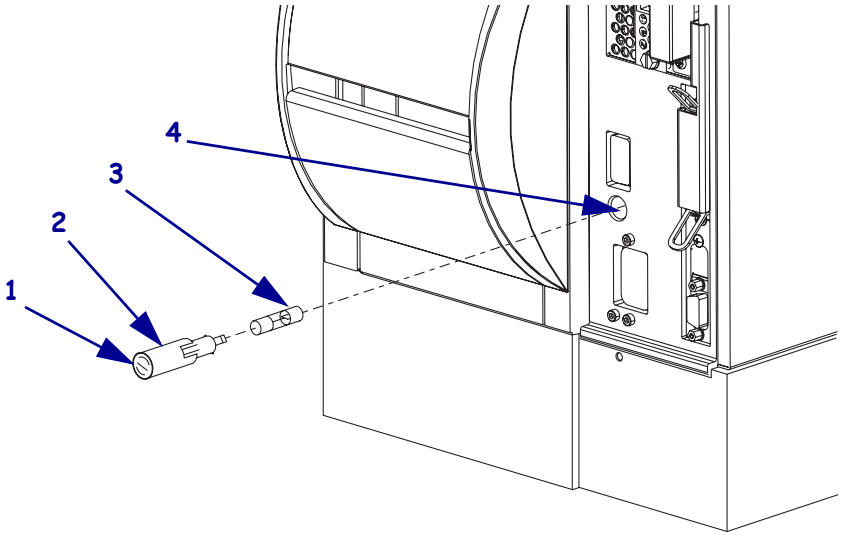

1	Slot
2	Fuse holder
3	Fuse
4	Fuse socket

To replace the fuse, complete these steps:

1. See Figure 14. Insert the tip of a flat blade screwdriver into the slot in the end of the fuse holder.
2. Turn the screwdriver counterclockwise until the fuse holder disengages from fuse socket.
3. Remove the fuse holder from the fuse socket.
4. Remove the old fuse from the fuse holder.
5. Insert a new, compatible fuse into the fuse holder.
6. Place the fuse holder into the fuse socket.
7. Insert the tip of a flat blade screwdriver into the slot in the end of the fuse holder.
8. With the screwdriver, press in gently, and then turn the screwdriver clockwise until the fuse holder engages.